To be used properly, this template must be opened in a vector based graphic program like Adobe Illustrator.

10'x10' Canopy Tent with 3 Full Walls
(30% Scale)
CPT-3005T1K

Notes:
- Keep all artwork away from the edge (reflected by the red dotted line) of the template
- **Use ONLY Pantone Solid Coated colors**
- **Convert all text to outlines**

# CANOPY TOP

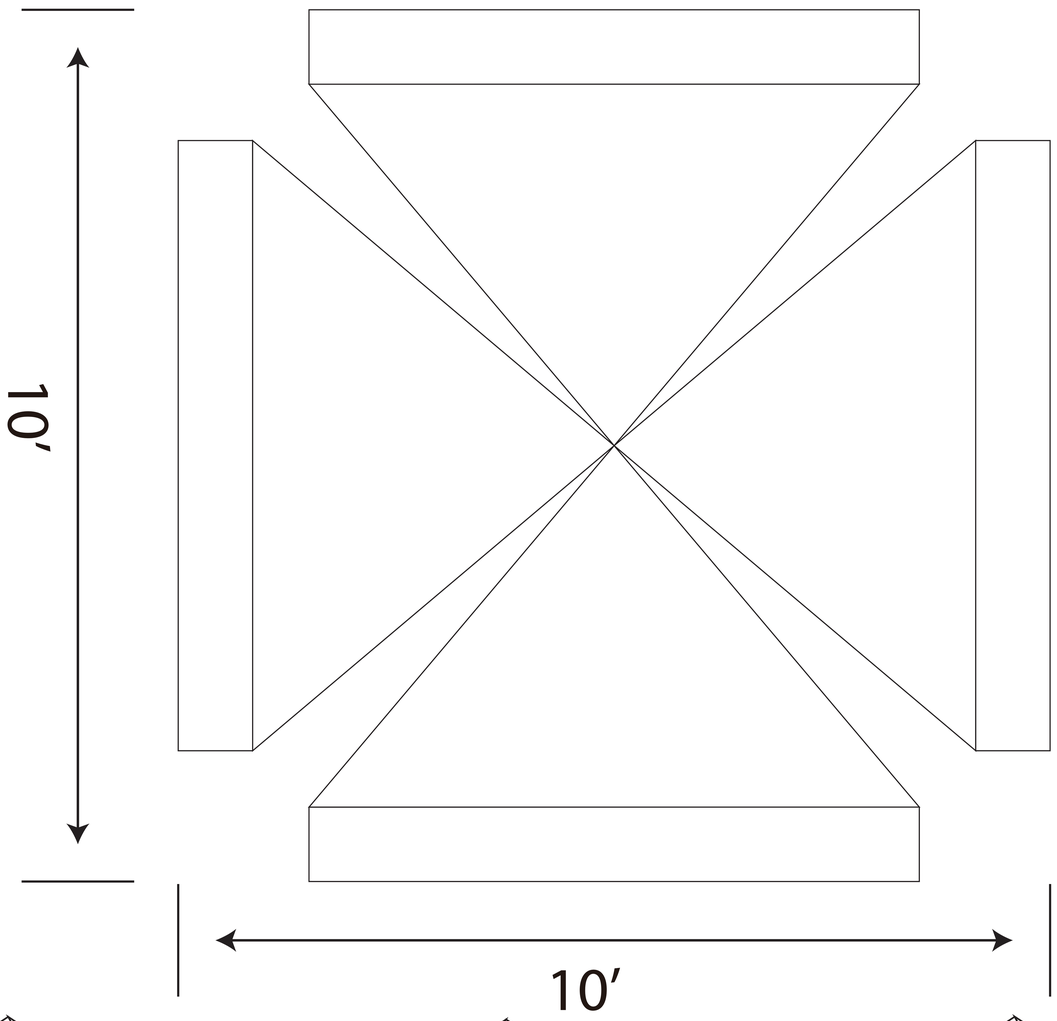


**Full Wall #1**

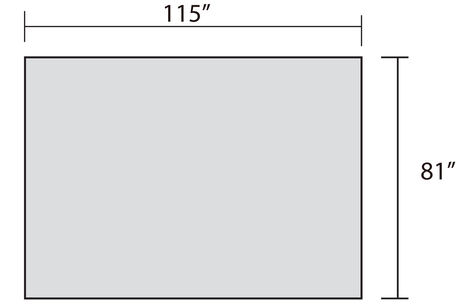


**Full Wall #2**

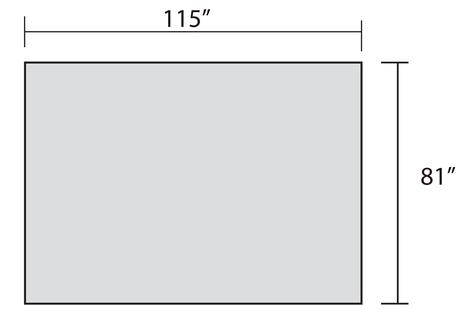


**Full Wall #3**

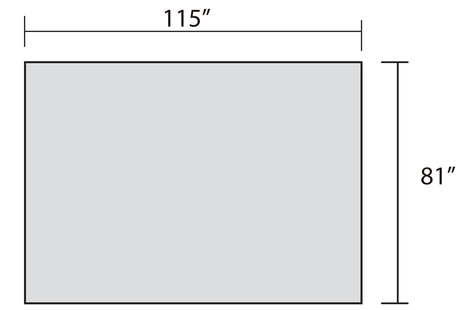


**Valance**

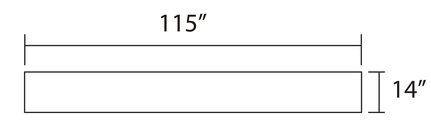


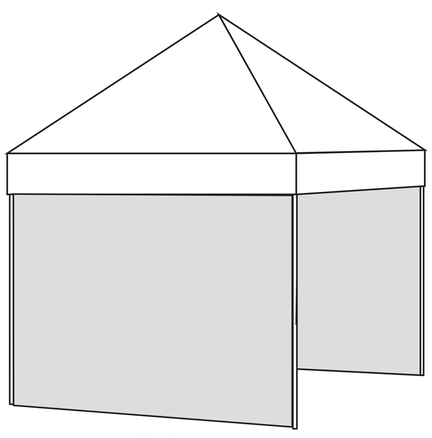

**Right View**

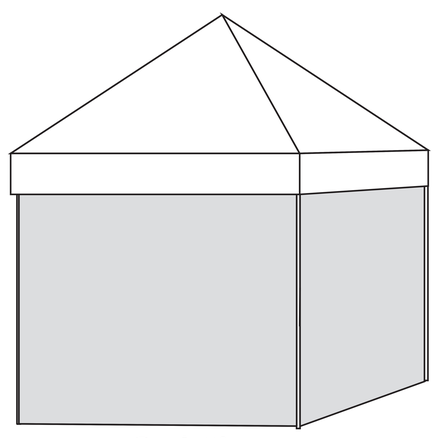

**Back View**

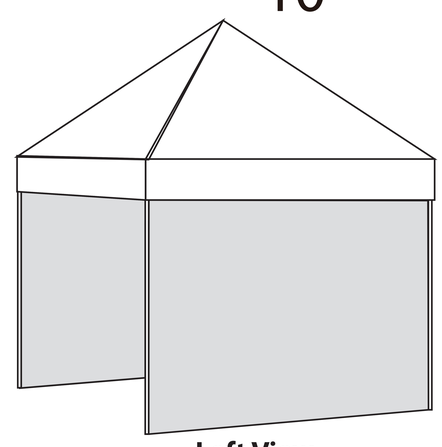

**Left View**

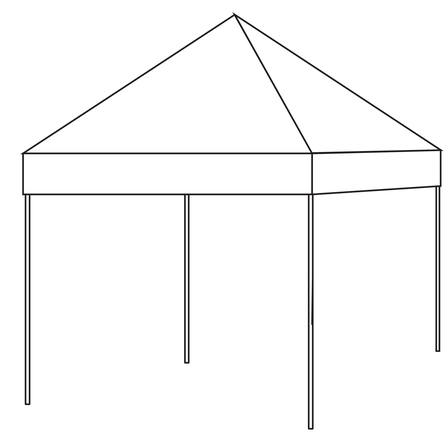

1-28-19

To be used properly, this template must be opened in a vector based graphic program like Adobe Illustrator.

10'x10' Canopy Tent with 3 Full Walls (70% Scale)
CPT-3005T1K

Notes:
- Keep all artwork away from the edge (reflected by the red dotted line) of the template
- Please use caution when artwork is close to seam lines (reflected by the green dotted line)
- **Use ONLY Pantone Solid Coated colors**
- **Convert all text to outlines**

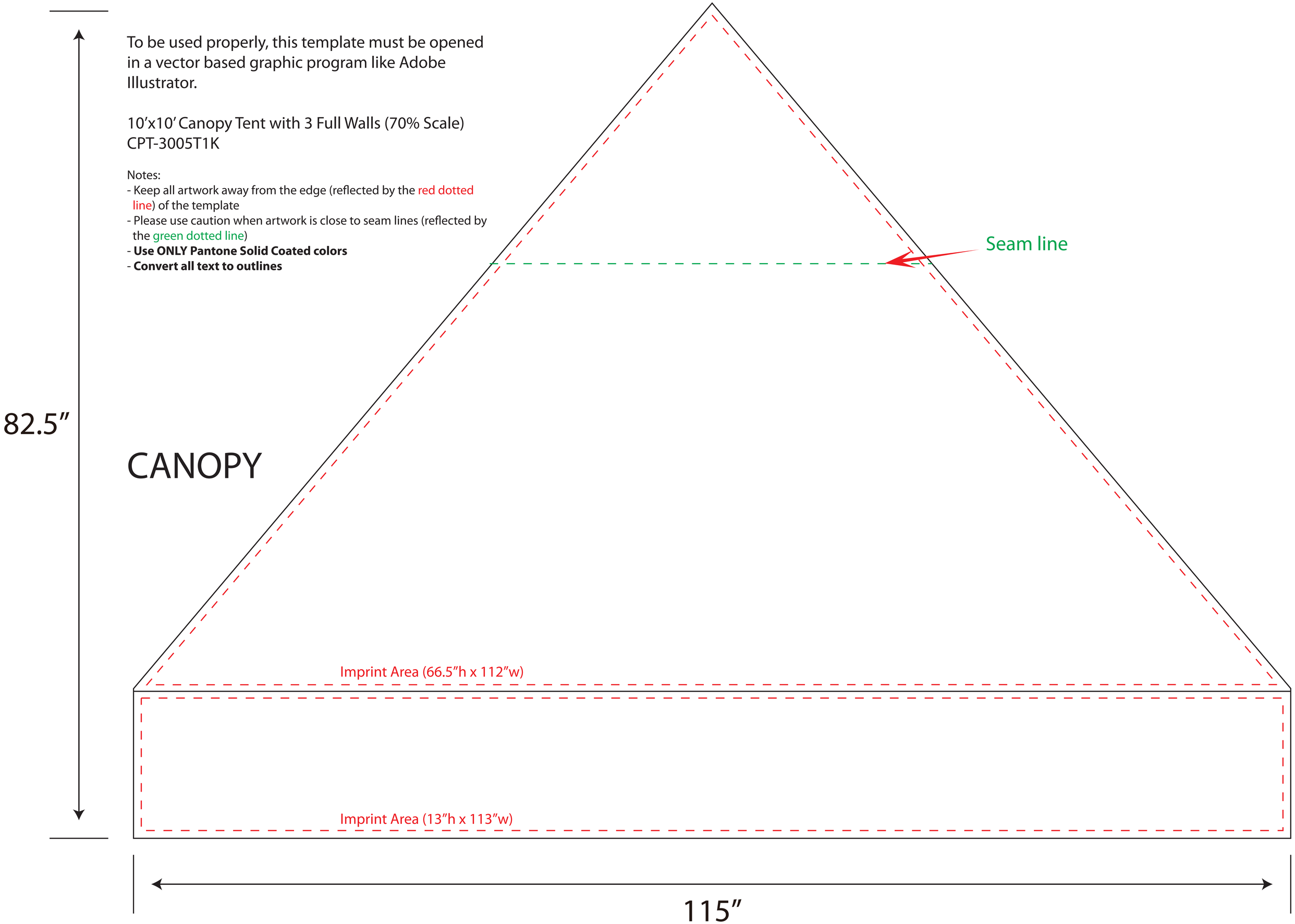

FULL WALL #1

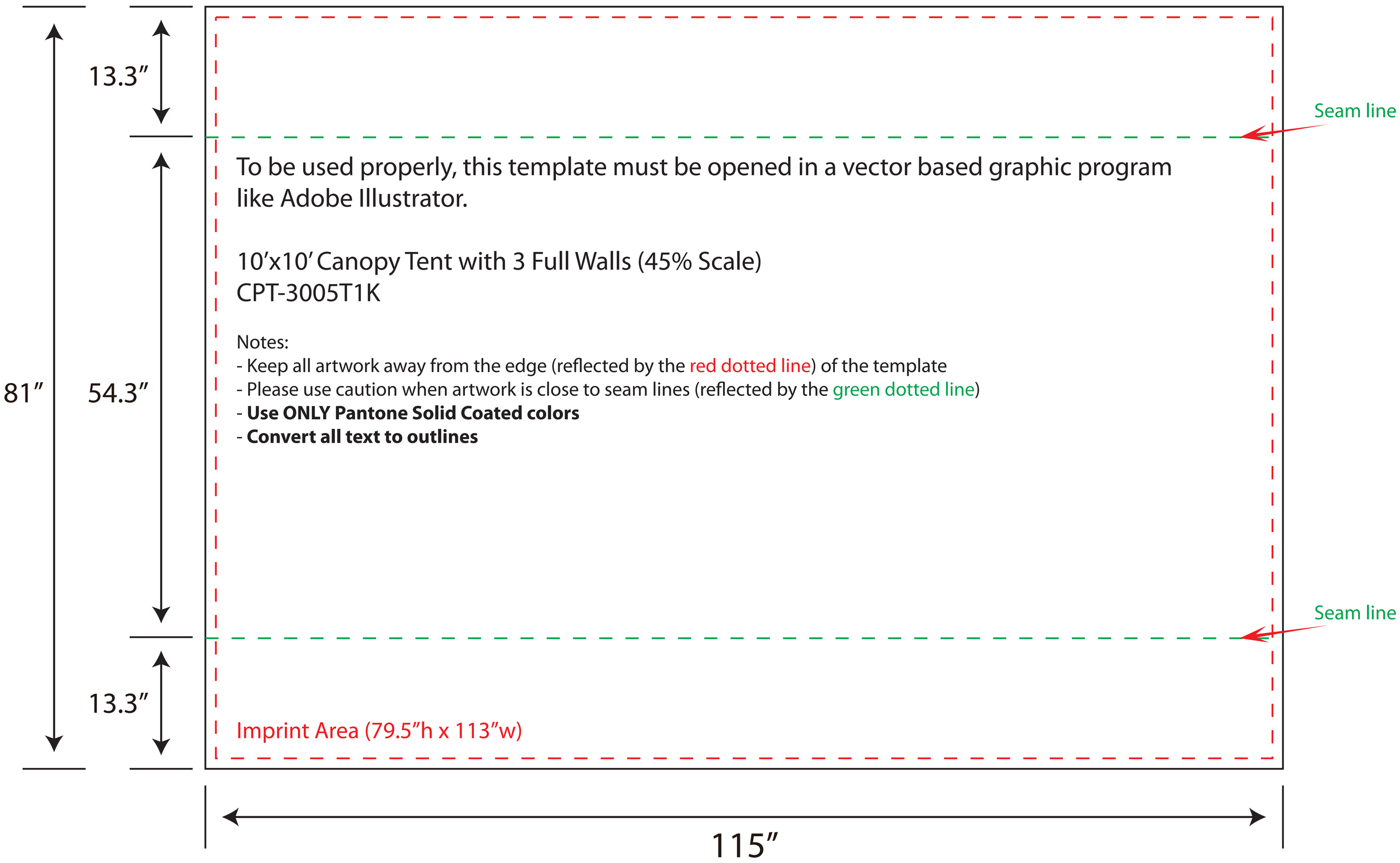


FULL WALL #2

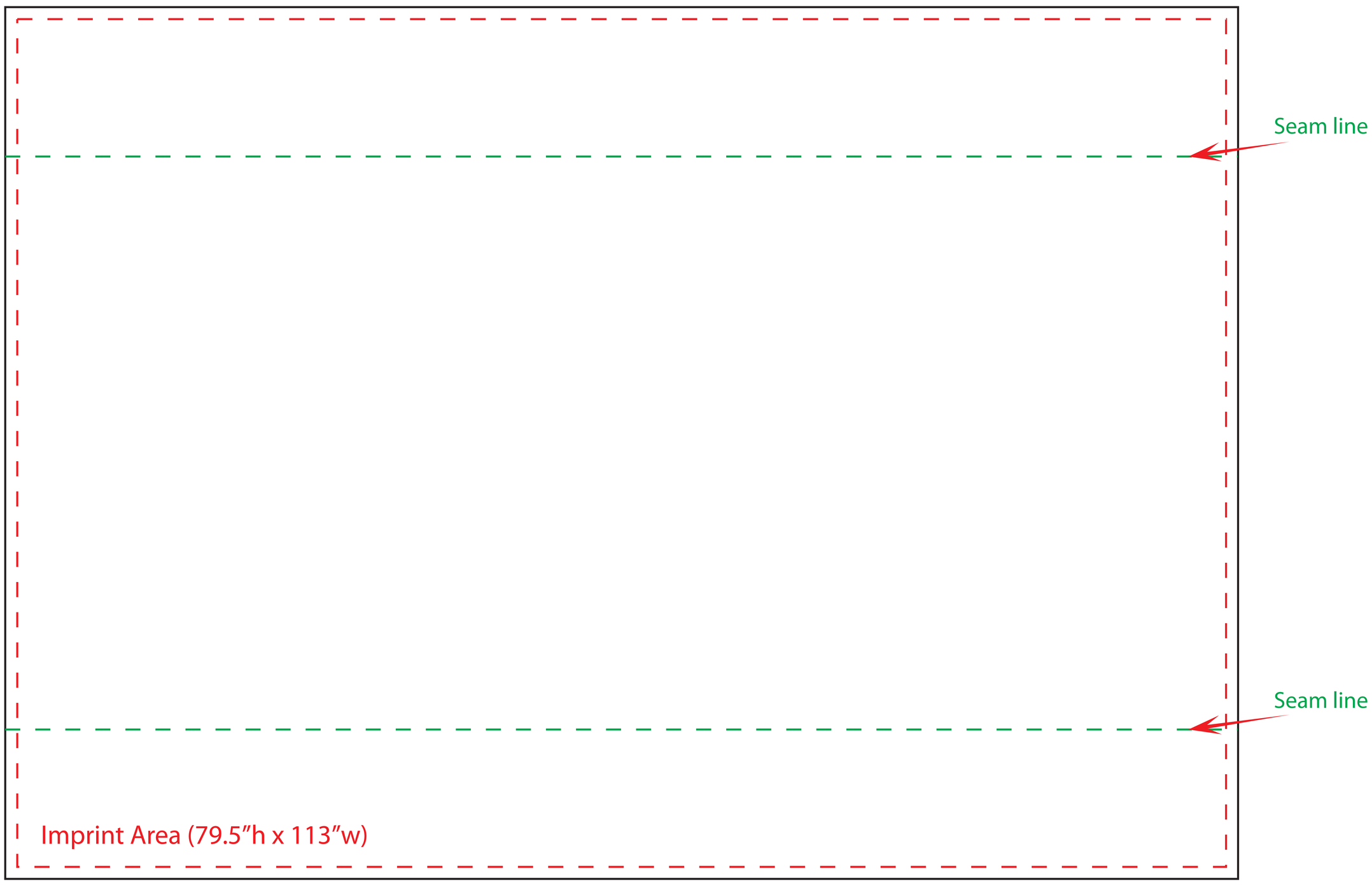


FULL WALL #3

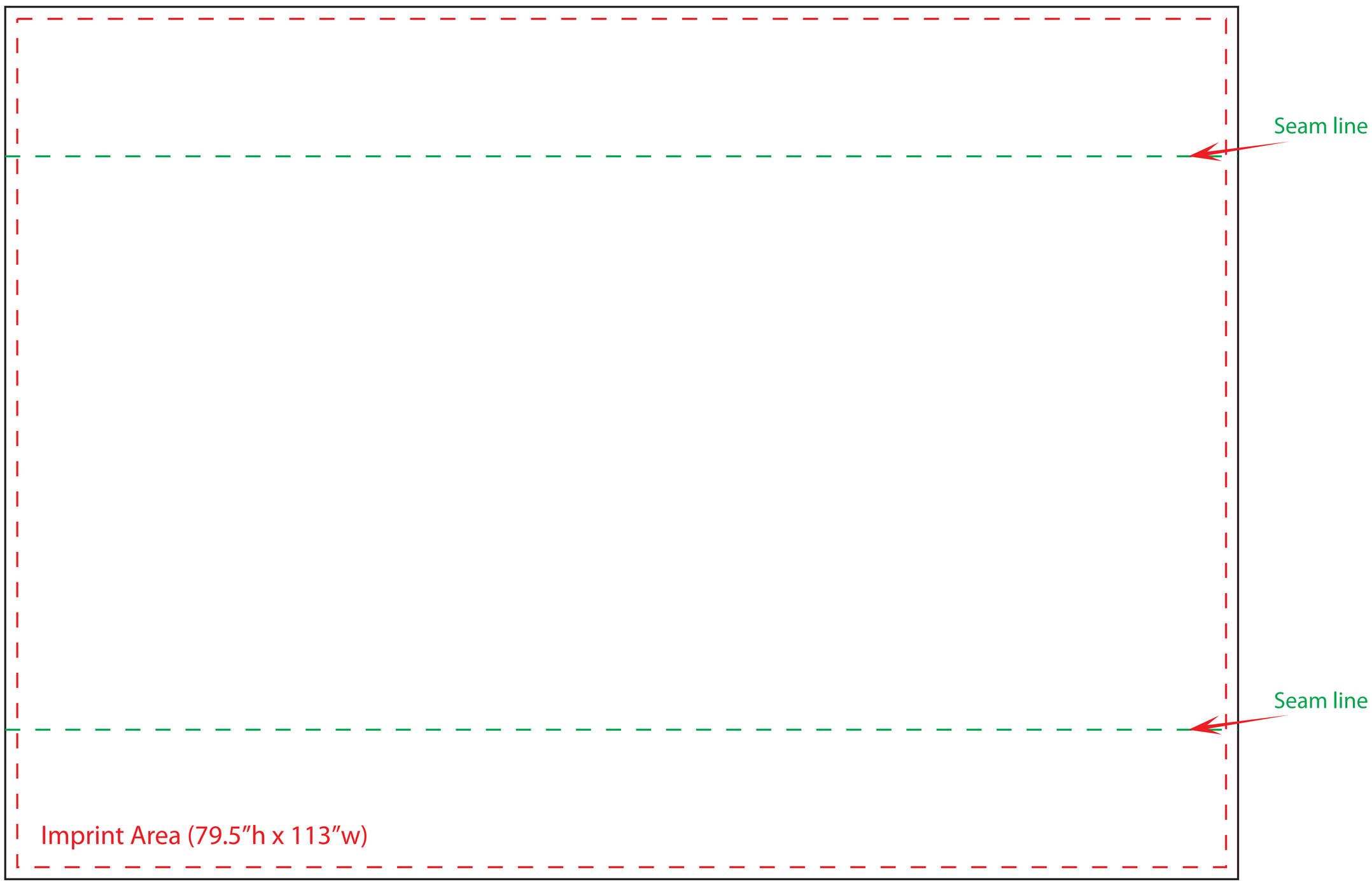

Back Panel 72”x29”

Side Panel 29”x30”

To be used properly, this template must be opened in a vector based graphic program like Adobe Illustrator.

6’Throw Table Cover Template (100% Scale)
DTC-6F

Notes:
- Keep all artwork away from the edge (reflected by the red dotted line) of the template
- Any artwork that is intended to run off the edge requires bleed past the edge (reflected by the blue dotted line)
- **Use ONLY Pantone Solid Coated colors**
- **Convert all text to outlines**

Top Panel 72”x30”

Side Panel 29”x30”

Front Panel 72”x29”

Imprint Area

Bleed Area

To be used properly, this template must be opened in a vector based graphic program like Adobe Illustrator.

6' Portable Half Drop Banner Template
(100% Scale)
PHB-6
PHB-6K
PHB-6KC
Imprint Area: 19.75" x 69.25"

Notes:
- Keep all artwork away from the edge (reflected by the red dotted line) of the template
- Any artwork that is intended to run off the edge requires bleed past the edge (reflected by the blue dotted line)
- The Pole Sleeve is black by default, the background color(s)/image(s) can be used but will carry an additional charge and requires additional bleed (reflected by the orange dotted line)
- **Use ONLY Pantone Solid Coated colors**
- **Convert all text to outlines**

Imprint Area

Bleed Area

7-30-20

To be used properly, this template must be opened in a vector based graphic program like Adobe Illustrator.

6' Portable Half Drop Banner Template
(100% Scale)
PHB-6
PHB-6K
PHB-6KC
Imprint Area: 19.75" x 69.25"

Notes:
- Keep all artwork away from the edge (reflected by the red dotted line) of the template
- Any artwork that is intended to run off the edge requires bleed past the edge (reflected by the blue dotted line)
- The Pole Sleeve is black by default, the background color(s)/image(s) can be used but will carry an additional charge and requires additional bleed (reflected by the orange dotted line)
- **Use ONLY Pantone Solid Coated colors**
- **Convert all text to outlines**

Imprint Area

Bleed Area

7-30-20