To be used properly, this template must be opened in a vector based graphic program like Adobe Illustrator.

10'x10' Canopy Tent (70% Scale)
CPT-1010
CPT-1010OS

Notes:
- Keep all artwork away from the edge (reflected by the red dotted line) of the template
- Please use caution when artwork is close to seam lines (reflected by the green dotted line)
- **Use ONLY Pantone Solid Coated colors**
- **Convert all text to outlines**

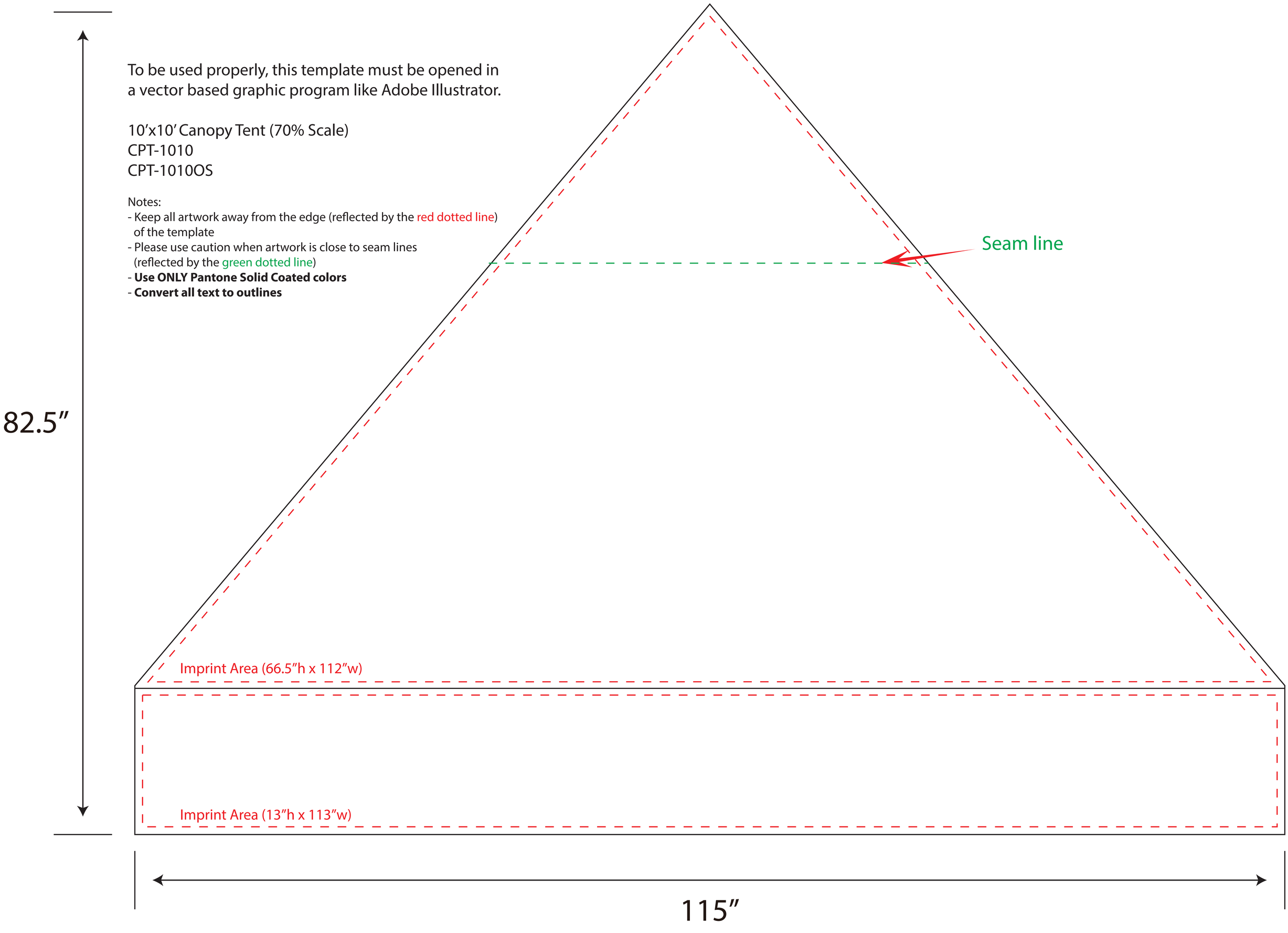

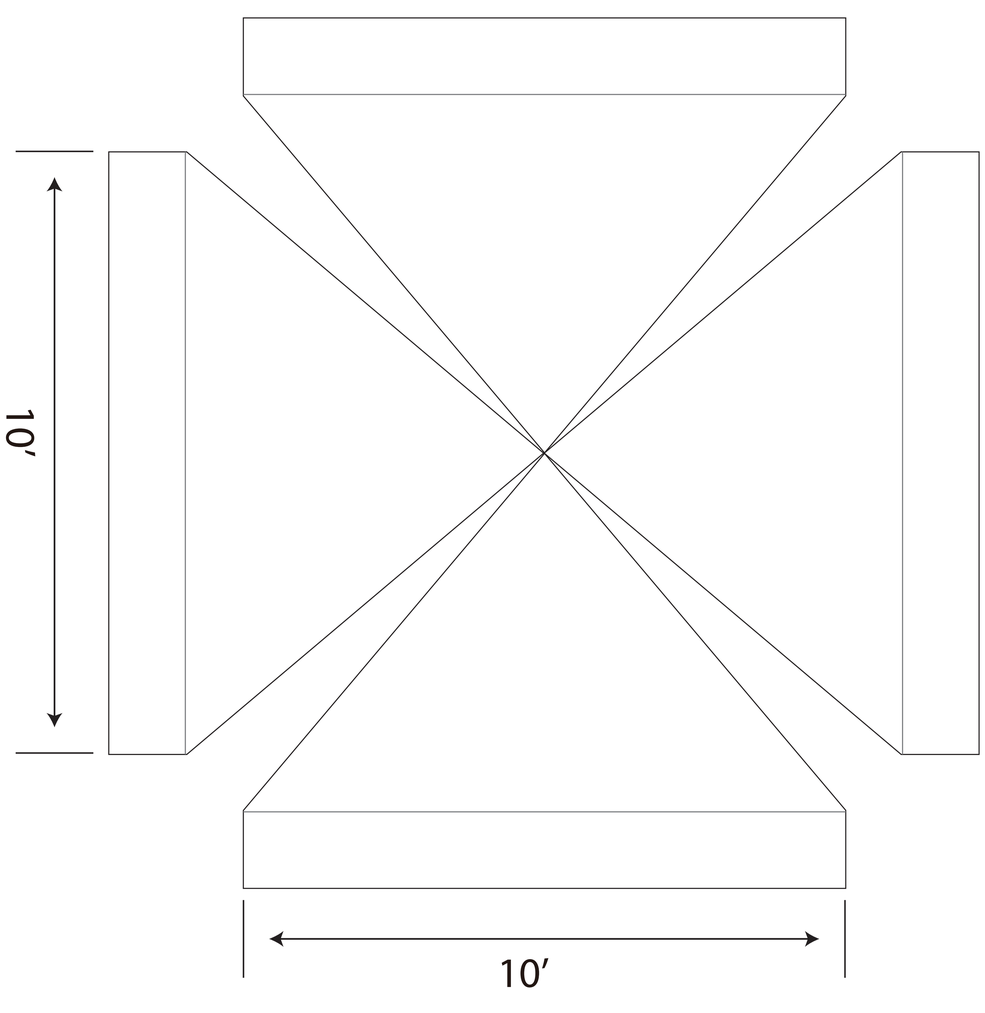

Valance

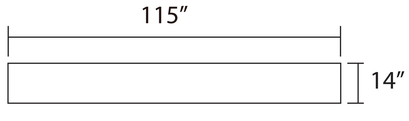

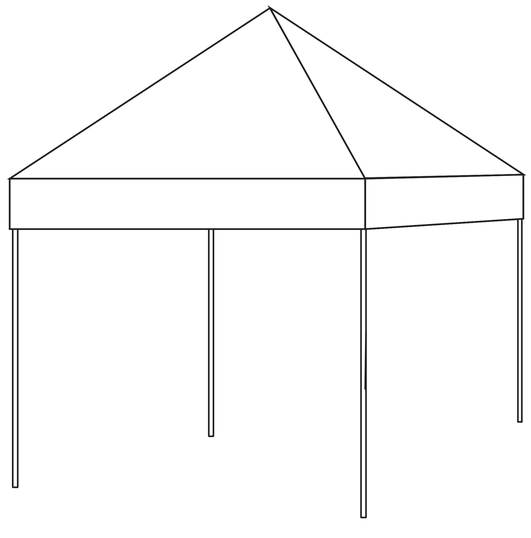

Back Panel 72”x29”

Side Panel 29”x30”

To be used properly, this template must be opened in a vector based graphic program like Adobe Illustrator.

6’Throw Table Cover Template (100% Scale)
DTC-6F
DTC-6FOS
DTC-6FKP
DTC-6FKPR
Imprint Area: 124”W x 82”H

Notes:
- Keep all artwork away from the edge (reflected by the red dotted line) of the template
- Any artwork that is intended to run off the edge requires bleed past the edge (reflected by the blue dotted line)
- **Use ONLY Pantone Solid Coated colors**
- **Convert all text to outlines**

Top Panel 72”x30”

Side Panel 29”x30”

Front Panel 72”x29”

Imprint Area

Bleed Area

3-25-2024

To be used properly, this template must be opened in a vector based graphic program like Adobe Illustrator.

6' Portable Half Drop Banner Template
(100% Scale)
PHB-6
PHB-6OS
Imprint Area: 19.75" x 69.25"

Notes:
- Keep all artwork away from the edge (reflected by the red dotted line) of the template
- Any artwork that is intended to run off the edge requires bleed past the edge (reflected by the blue dotted line)
- The Pole Sleeve is black by default, the background color(s)/image(s) can be used but will carry an additional charge and requires additional bleed (reflected by the orange dotted line)
- **Use ONLY Pantone Solid Coated colors**
- **Convert all text to outlines**

Imprint Area

Bleed Area

7-30-20

To be used properly, this template must be opened in a vector based graphic program like Adobe Illustrator.

6' Portable Half Drop Banner Template
(100% Scale)
PHB-6
PHB-6OS
Imprint Area: 19.75" x 69.25"

Notes:
- Keep all artwork away from the edge (reflected by the red dotted line) of the template
- Any artwork that is intended to run off the edge requires bleed past the edge (reflected by the blue dotted line)
- The Pole Sleeve is black by default, the background color(s)/image(s) can be used but will carry an additional charge and requires additional bleed (reflected by the orange dotted line)
- **Use ONLY Pantone Solid Coated colors**
- **Convert all text to outlines**

Imprint Area

Bleed Area

7-30-20