To be used properly, this template must be opened in a vector based graphic program like Adobe Illustrator.

10’x10’ Canopy Tent with 3 Full Walls (30% Scale)
CPT-3005T1KD
CPT-3005T1KDOS

Notes:
- Keep all artwork away from the edge (reflected by the red dotted line) of the template
- **Use ONLY Pantone Solid Coated colors**
- **Convert all text to outlines**

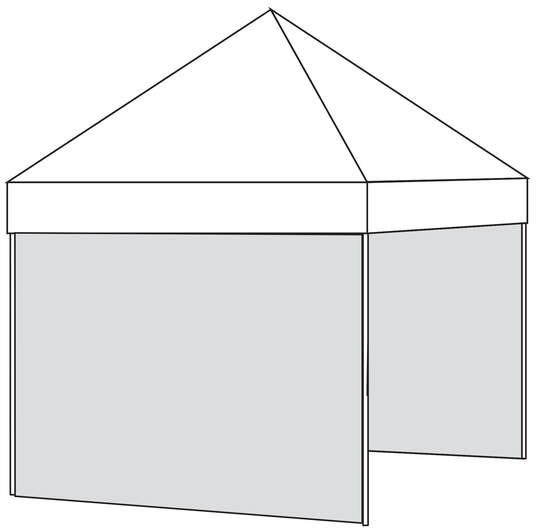

Right View

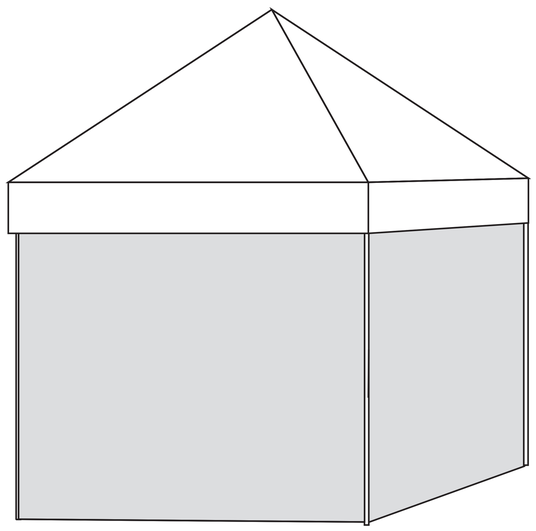

Back View

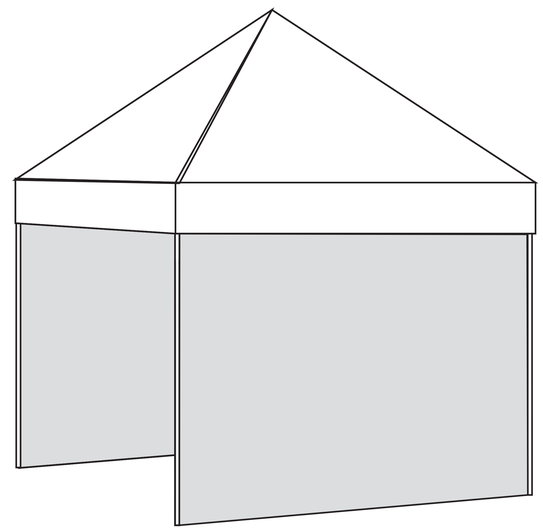

Left View

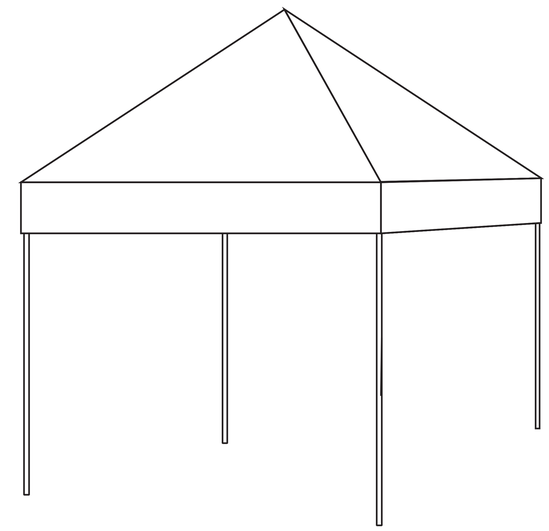

CANOPY TOP

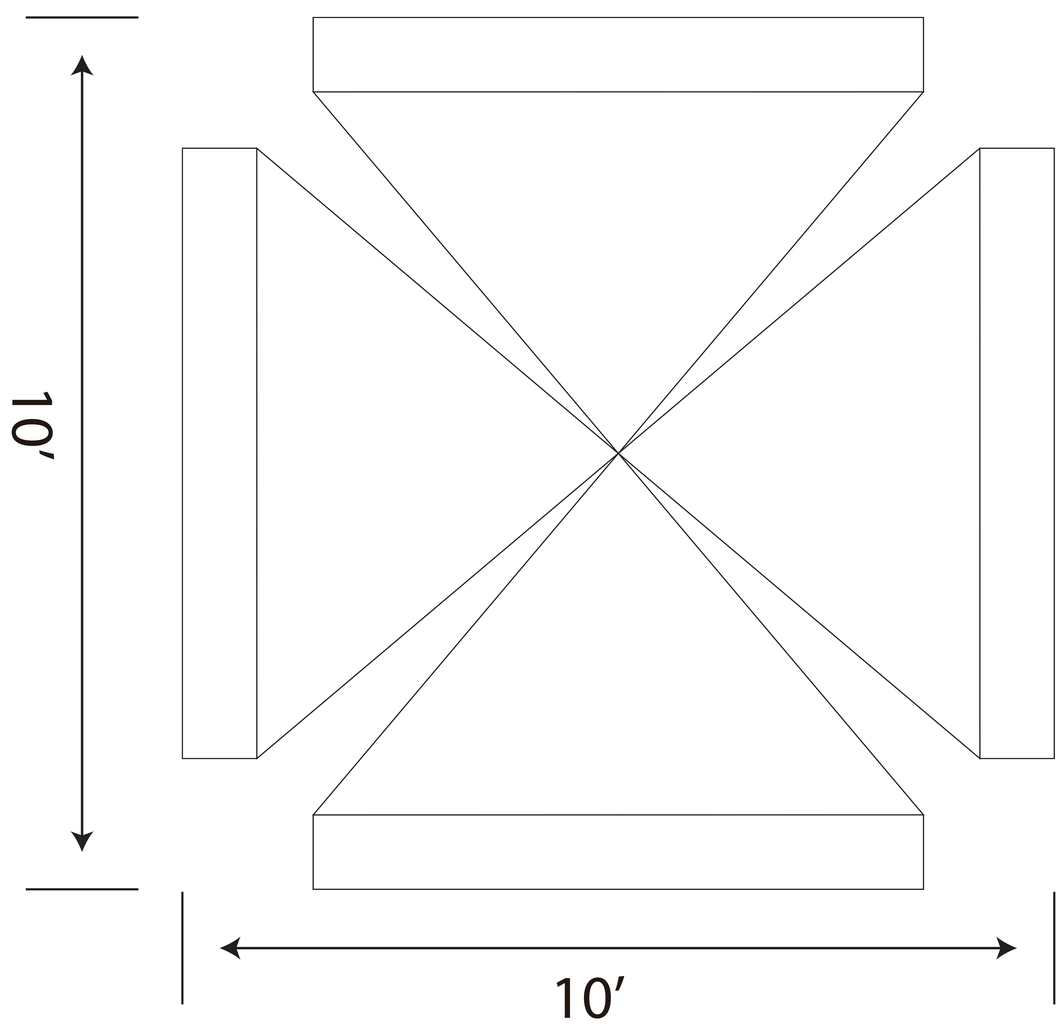

Valance

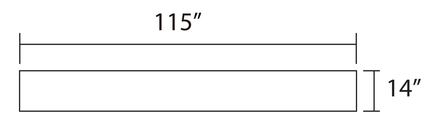

Full Wall #1 - inside

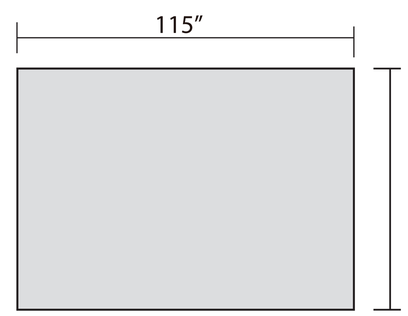

Full Wall #1 - outside

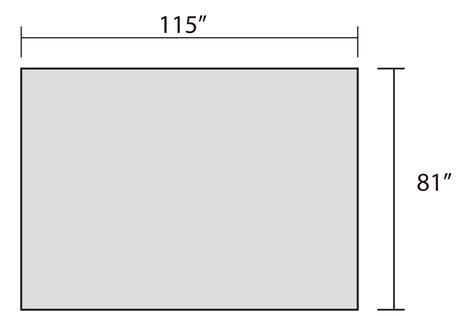

Full Wall #2 - inside

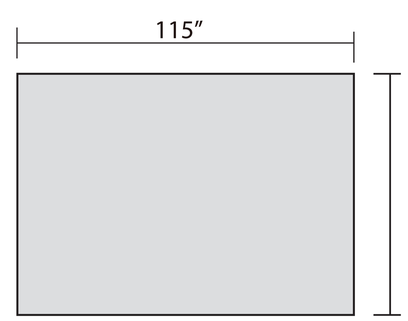

Full Wall #2 - outside

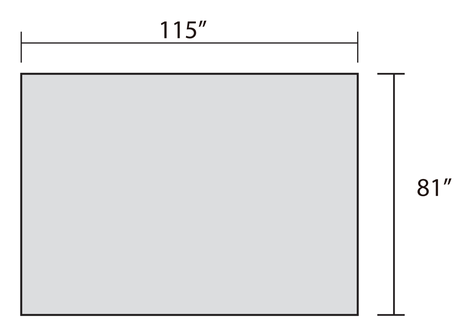

Full Wall #3 - inside

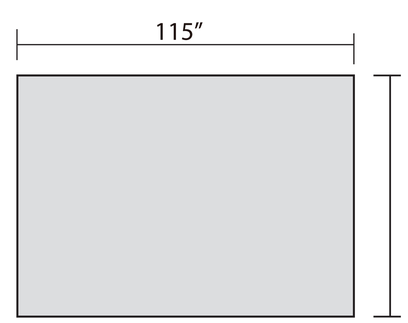

Full Wall #3 - outside

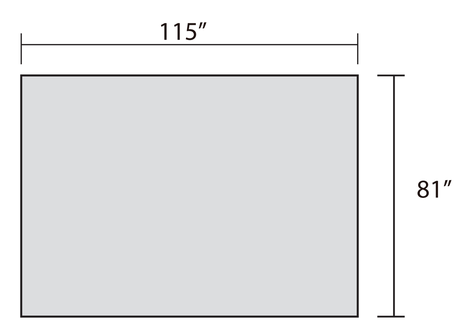

To be used properly, this template must be opened in a vector based graphic program like Adobe Illustrator.

10'x10' Canopy Tent with 3 Full Walls (70% Scale)
CPT-3005T1KD
CPT-3005T1KDOS

Notes:
- Keep all artwork away from the edge (reflected by the red dotted line) of the template
- Please use caution when artwork is close to seam lines (reflected by the green dotted line)
- **Use ONLY Pantone Solid Coated colors**
- **Convert all text to outlines**

CANOPY

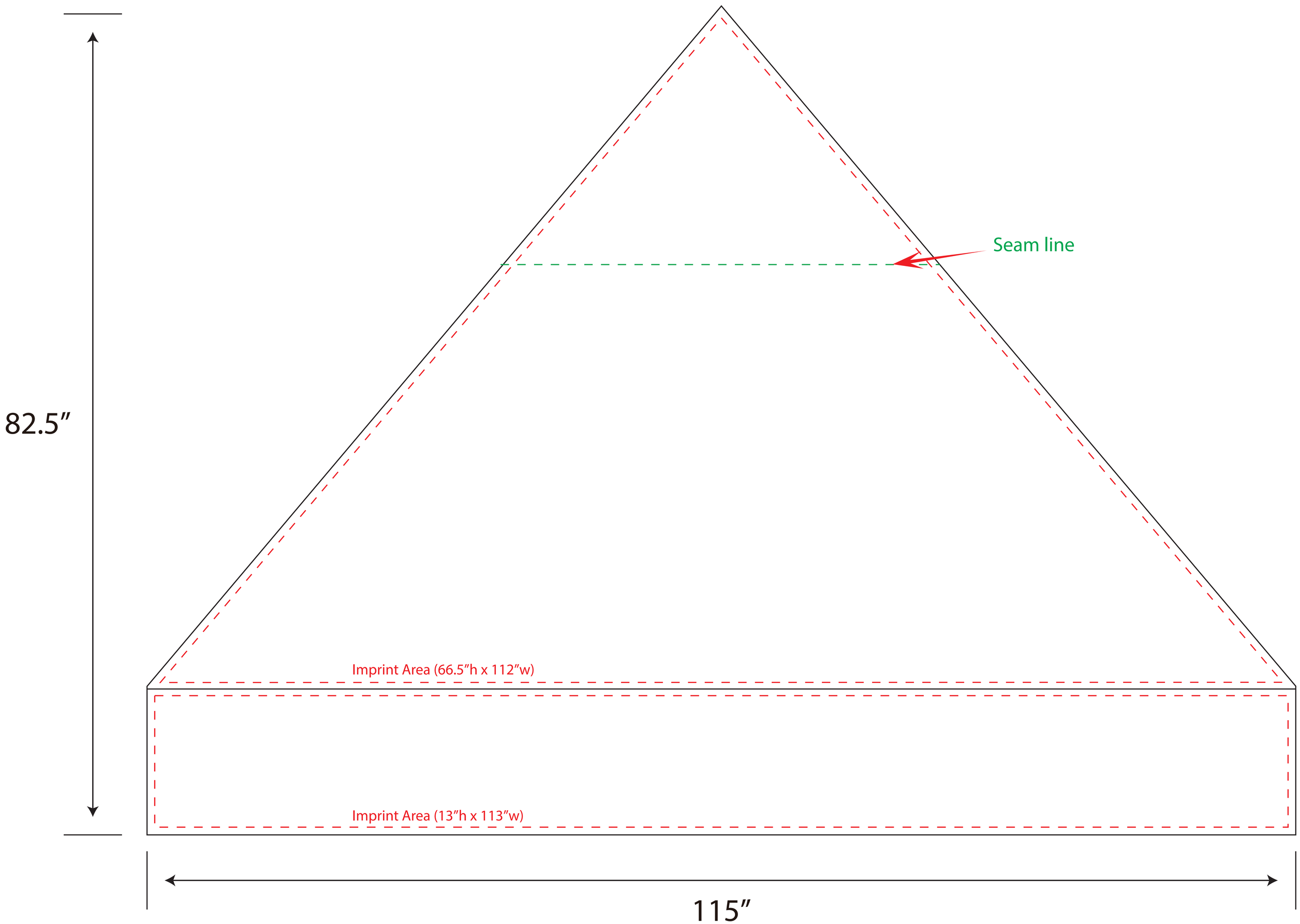

To be used properly, this template must be opened in a vector based graphic program like Adobe Illustrator.

10'x10' Canopy Tent with 3 Full Walls (45% Scale)
CPT-3005T1KD
CPT-3005T1KDOS

Notes:
- Keep all artwork away from the edge (reflected by the red dotted line) of the template
- Please use caution when artwork is close to seam lines (reflected by the green dotted line)
- **Use ONLY Pantone Solid Coated colors**
- **Convert all text to outlines**

FULL WALL #1 - inside

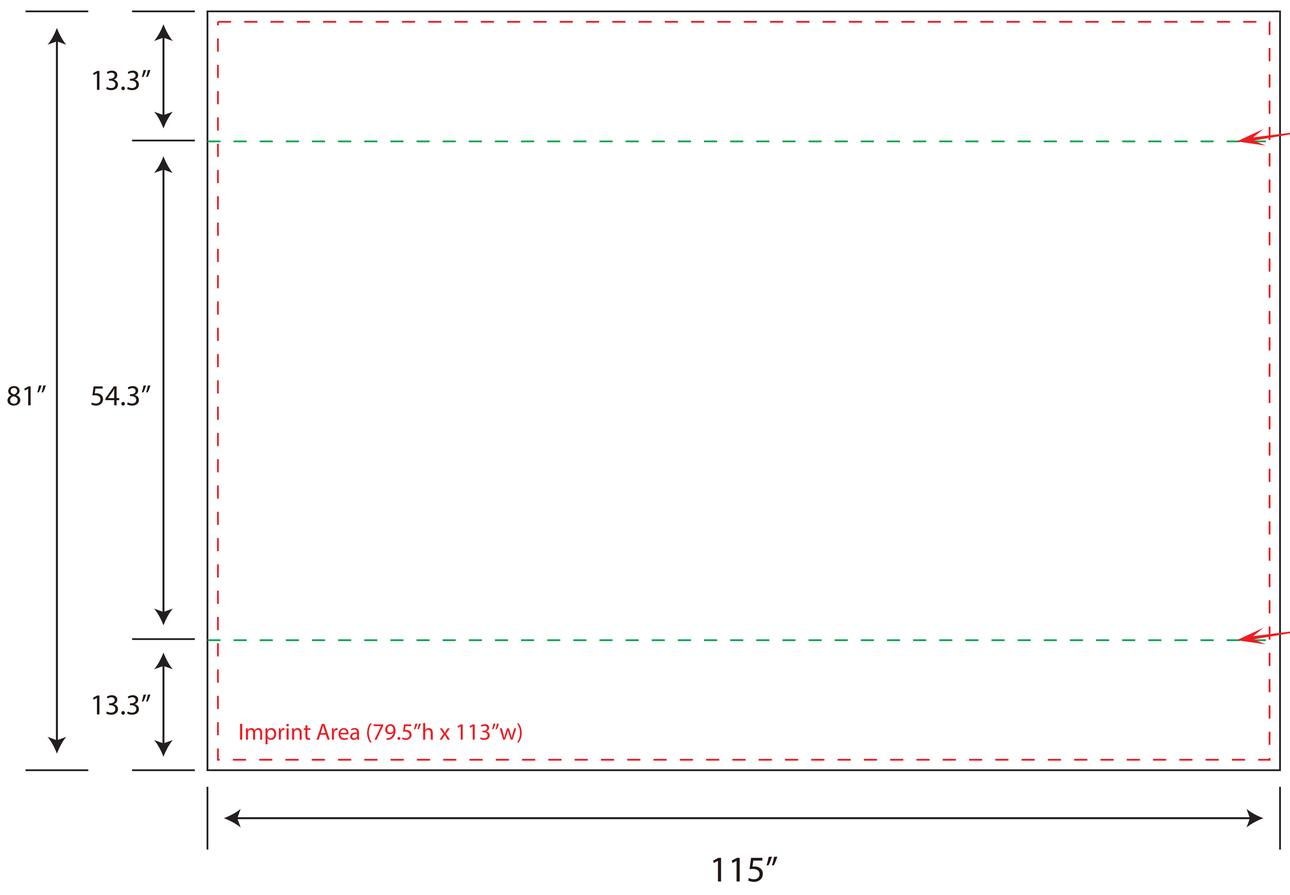

FULL WALL #1 - outside

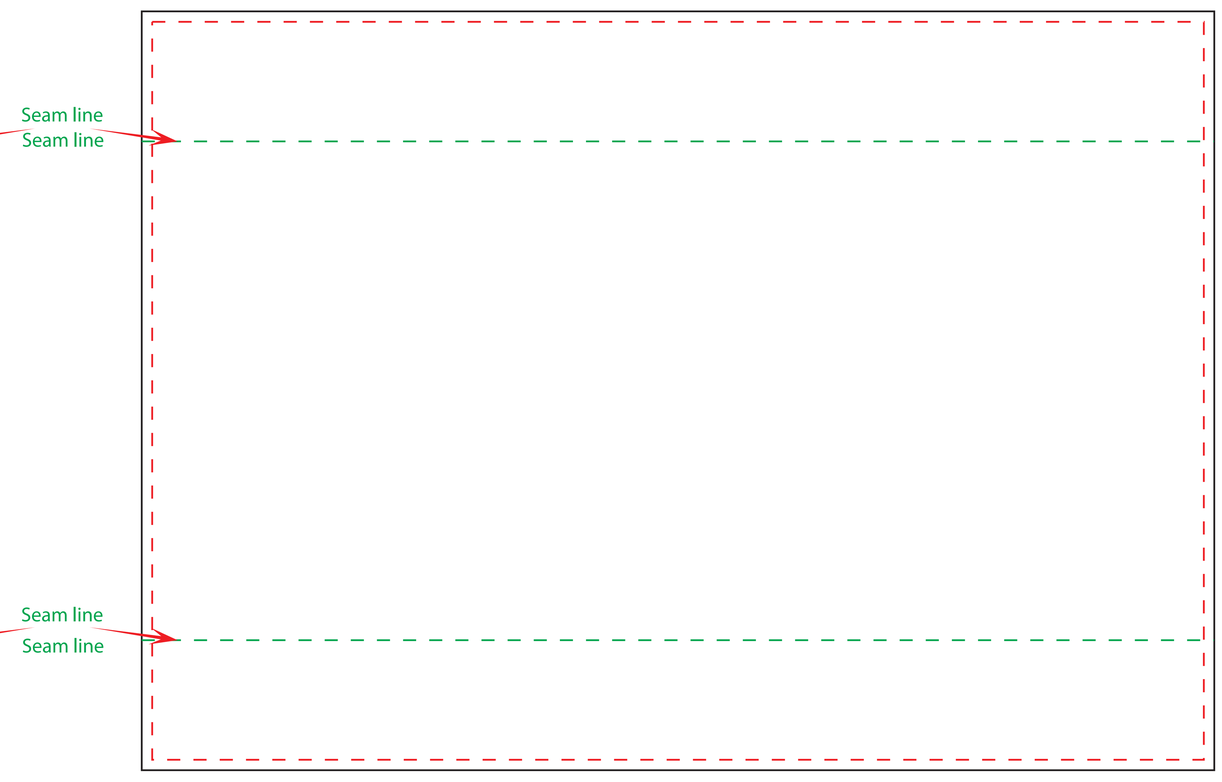

FULL WALL #2 - inside

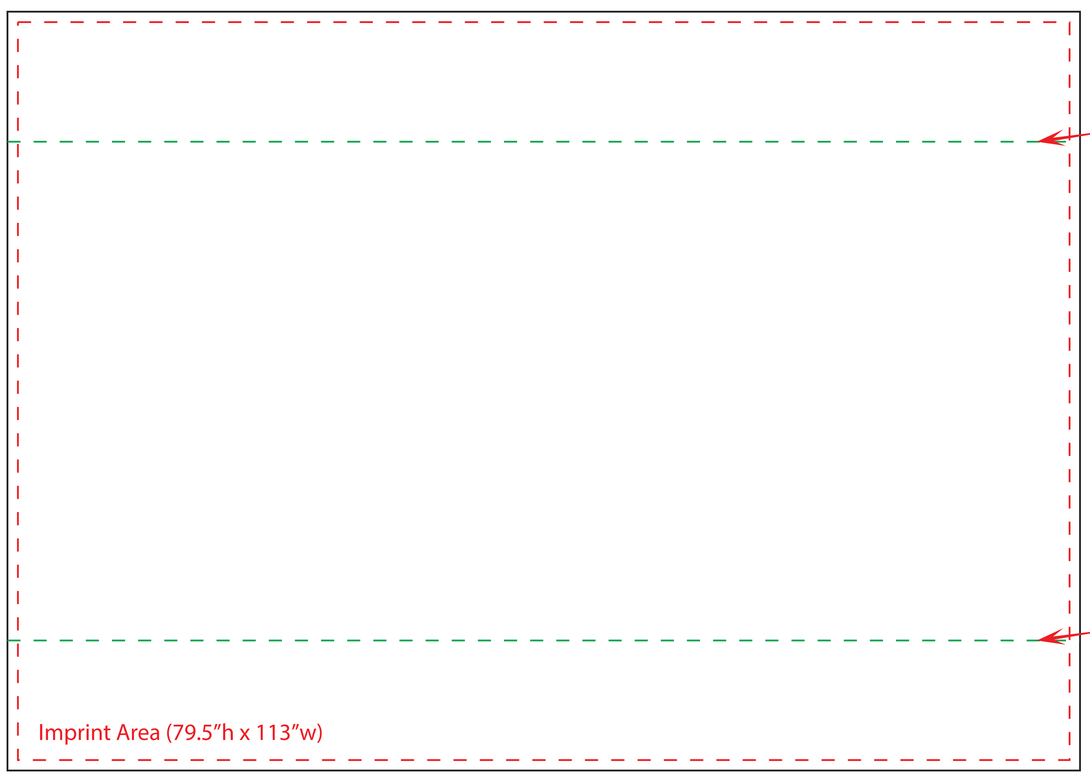

FULL WALL #2 - outside

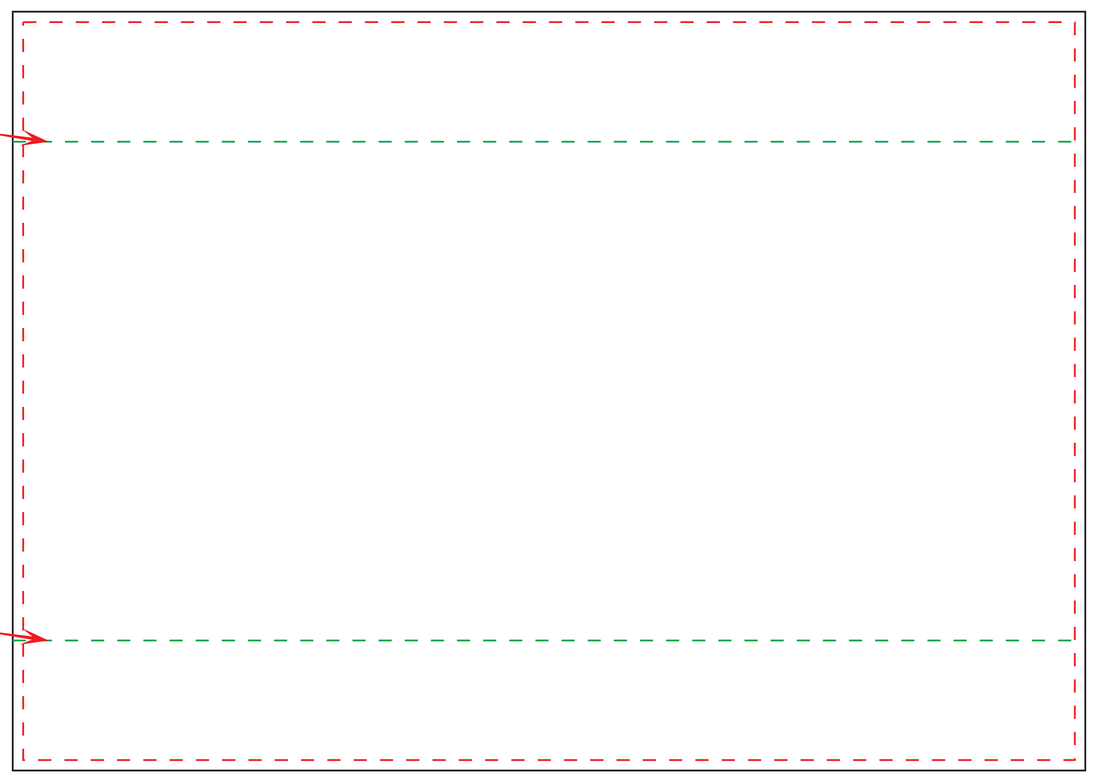

FULL WALL #3 - inside

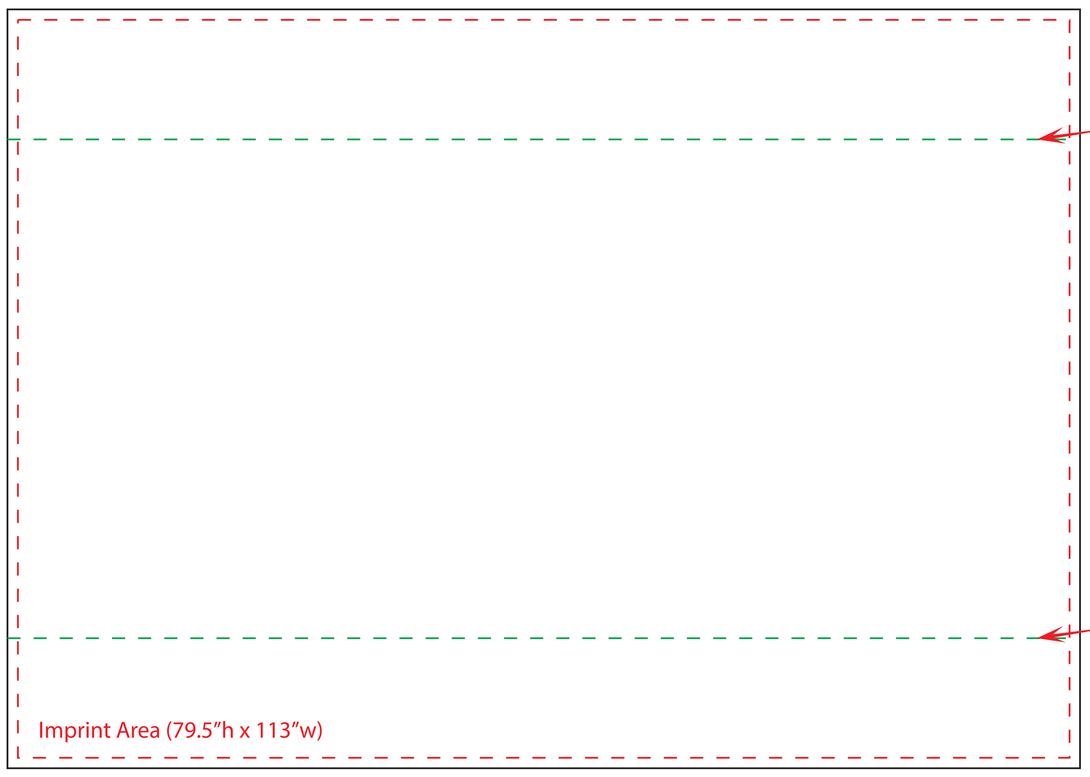
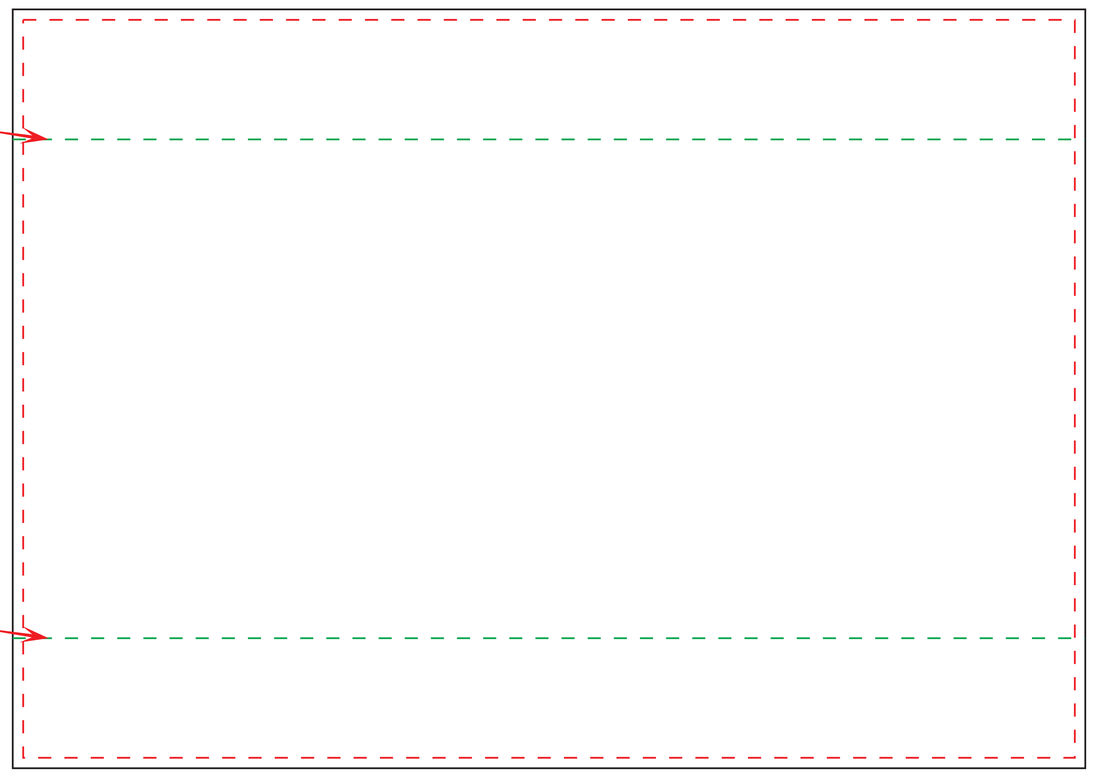
FULL WALL #3 - outside